EN

User Manual

MS-4274PRO

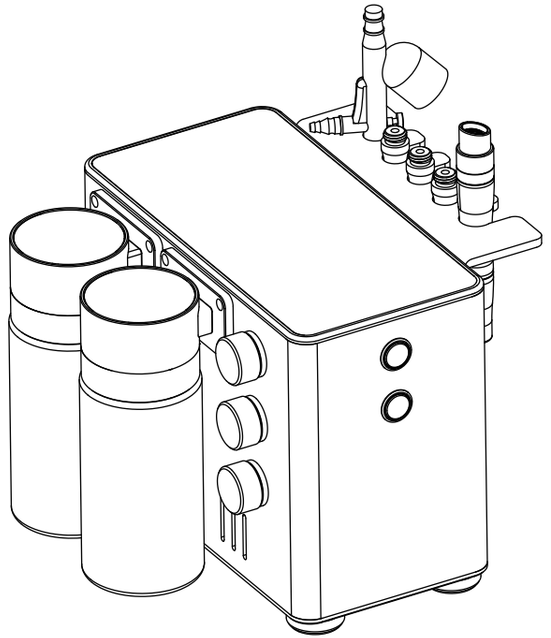

EN

Content

1.Safety precautions 1
2.Contraindications 1
3.Overview 2
4.Interface Introduction 2
5.Usage Details 4
6.Technical Specification 6
7.Use Precautions 7
8.Maintenance & Cleaning 8
9.FAQ 8
10.Ask & Answer 10
11.Operation Guide 11
12.Warranty & Support 12

1.Safety precautions

1.Please read this manual carefully before use and familiarize yourself with the operation of this instrument and related technology.

2.This instrument is a high-precision electronic device that requires proper storage. Please avoid storing it in humid conditions, direct sunlight, or near flammables and explosives to prevent damage.

3.Always use the designated accessory provided or recommended by the manufacturer to ensure performance throughout its service life.

4.Do not place the instrument in high-temperature conditions, as this may negatively impact its service life and performance.

5.Do not apply the instrument on eyes, thyroid, parathyroid, testicles, pregnant women's abdomen, pacemakers, etc.

6.Patients should refrain from using this instrument unless they have obtained permission from their doctor.

7.Ensure that the instrument is applied on moist skin and avoid the operation on dry skin.

8.Power off the instrument when not in use to ensure its safety.

9.To maintain hygiene and extend the device's service life, sterilize it with saline.

2.Contraindications

Before using this instrument, it is essential to consult your doctor or seek advice from professionals. Details below:

1.Pregnancy or lactation.

2.Hypertension, heart disease, or with a pacemaker installed. Unhealed wounds or in the recovery period of surgery.

3.Individuals with unhealed wounds or those in the recovery period from surgery.

4.Epilepsy, severe diabetes, and hyperthyroidism.

5.Malignant tumors, hemophilia, and hemorrhage.

6.Skin disease or infectious disease.

7.Had plastic surgery within 3 months or with implants or metal objects in the treatment area.

3.Overview

This beauty instrument utilizes the most advanced technology for deep cleansing and complexion brightening, promising the user a glowing and vibrant face. It provides the perfect solution for people seeking improvements in skin appearance without injections, drugs, or side effects. This external-use device delivers discernible improvements with each passing day.

4.Interface Introduction

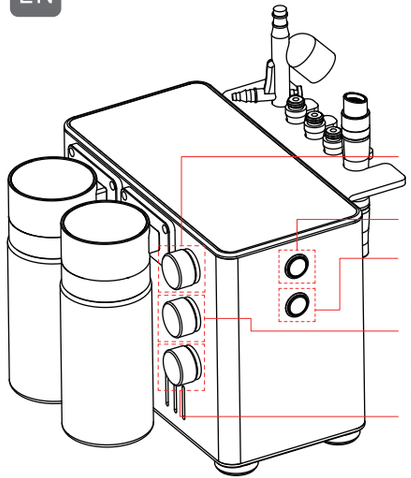

Microdermabrasion suction control knob:
Clockwise for higher suction, counterclockwise for lower suction.

Microdermabrasion and Spray switch

HydraFacial switch

HydraFacial water valve:
Counterclockwise for larger water flow, clockwise for smaller water flow.
Fine-tunable, rotatable 0–10 full turns.

HydraFacial suction control knob:
Counterclockwise for higher suction, clockwise for
lower suction.Fine-tunable, rotatable 0–10 full turns.

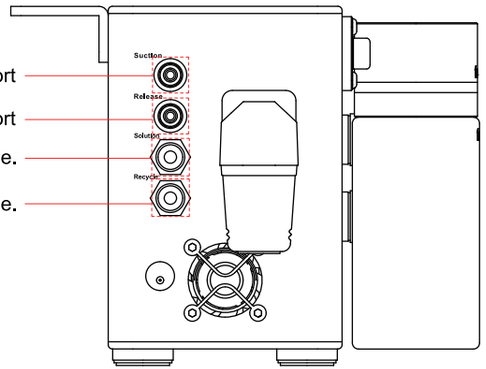

Microdermabrasion (Black Rubber Tube) Connection Port

Spray (Red Rubber Tube) Connection Port

Hydrafacial transparent tube connector: Insert the tube firmly into the hole.

HydraFacial blue tube connector: Insert the tube firmly into the hole.

5.Usage Details

Microdermabrasion:



The black rubber ring must be correctly installed to prevent issues like no suction or weak suction.

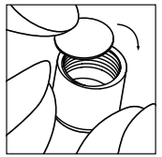

Installing the cotton filter is essential as it helps prevent foreign particles from damaging the device and also indicates the cleansing effectiveness.

Recommended application area:

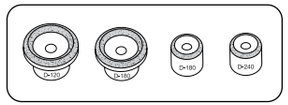

Nose wings, cheeks, and body

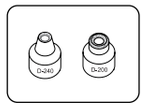

Nasolabial groove with stubborn blackheads, mites, and clogged pores.

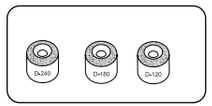

Forehead, chin, nose wings, and cheeks

Applicable area of HydraFacial tip



White soft silicone head: The silicone head is soft and elastic, reducing friction without pulling the skin. It cushions pressure, protects the sensitive skin barrier, and assists in the penetration of nutrient solutions. It is more suitable for sensitive and dry skin types.



Transparent hard silicone head: The firm head deeply extracts stubborn oil and blackheads. When used with solutions, it accelerates the exfoliation of the stratum corneum and precisely removes dead skin cells. It is more suitable for oily skin, combination skin, and acne-prone skin.



Flat suction head: Suitable for large-area cleaning of oil, dirt and keratin.



Linear suction head: Suitable for cleaning dirt and cosmetic residue in linear facial areas such as the bridge of the nose, philtrum, and around the eyes.



Spiral suction head: Suitable for deep cleaning. It effectively removes stubborn dirt, blackheads, and aged keratin from the pore walls and sucks them out.



Focus suction head: Suitable for local problem areas, such as areas with concentrated acne and pimples.

SPRAY handle

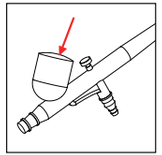

Remove the cap from the mini-flask and pour in your choice of liquid, such as pure water, toner, saline, or a watery serum, based on skin conditions.

6.Technical Specification

	Power supply Input: AC110V-240V 50HZ-60Hz	Net Weight: 3.4kg
	Power:20W	Gross Weight: 4.5kg
	Dimensions: 10.6x7.5x9.8inches	
	Input Power: 20W	
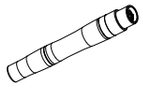	Power:20W	
	Vacuum: -62KPa	Noise level: ＜65db(30cm away)

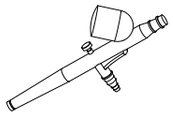	Power: 10W	Noise level: ＜65db(30cm away)
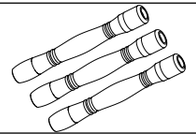	Power: 10W	Vacuum: -62KPa

7.Use Precautions

1.Strictly follow the instructions in the manual to use the instrument and train operator.

2.Before using the instrument, use a plug with a grounding pin and ensure the power socket is grounded.

3.Make sure the voltage of the instrument is adapted. If the local power supply voltage is unstable, we recommend adding a power-matched regulated power supply between the mains and the instrument.

4.The handle must be connected to the corresponding sockets on the main machine, incorrect connection may cause operation failure.

5.The rubber ring must be correctly installed to prevent issues like no suction or weak suction during dermabrasion treatment.

6.The cotton filter is essential to prevent impurities from entering the hose and damaging the machine during dermabrasion treatment.

7.Keeping the skin moist contributes to a more comfortable experience.

8.Maintenance & Cleaning

1.Disconnect the power cord when not in use and store the instrument in a dry, cool, and well-ventilated place.

2.After use, rinse the microdermabrasion/HydraFacial tips in saline, allow them to air dry, and store them in a dry condition.

3.After cleaning the instrument, cover it with a dustcloth or plastic wrap. Before use, ensure to sanitize the handle again for hygienic reasons.

4.Disassembling the instrument and attempting to clean the inside is strictly prohibited. This task should only be performed by professionals.

9.FAQ

1.Will the skin get thinner and more sensitive after the microdermabrasion treatment?

A: No, the microdermabrasion treatment is a non-invasive procedure that targets only the aged stratum corneum. Since our skin naturally renews itself every 28 days, microdermabrasion contributes to smoother, brighter, and finer skin without causing increased sensitivity.

2.Why do I need exfoliation?

A: The stratum corneum is the outermost layer of the epidermis, consisting of 15 – 20 layers of dead cells that can vary from different parts of the human body. The skin's metabolism cycle also varies among individuals of different ages. For example, the cycle is 28 days for teenagers, whereas for adults, it is the sum of their age plus 10. However, for a variety of reasons, the stratum corneum

might not shed in a timely manner, resulting in an increased thickness of the stratum corneum, a dull complexion, and an impact on skin metabolism. In such cases, additional exfoliation is necessary.

3.Can I apply makeup immediately after a microdermabrasion treatment?

A: Yes, the treatment contributes to achieving moisturized and plump skin, ensuring a seamless and well-blended makeup application. Microdermabrasion is a non-invasive procedure that delivers fast, safe, and healthy results.

4.When can I expect to see results?

A: Immediately after the initial session, you will observe a noticeable improvement in your skin's clarity and transparency. Multi-sessions contribute to more visible effects including deeply hydrated skin, brightened complexion, reduced fine lines, and prevention of the aging process.

5.Is the microdermabrasion addicting?

A: No. Microdermabrasion is a skincare procedure that enhances skin condition and provides deep cleansing. It goes beyond mere treatment; it helps the skin absorb nutrients and addresses concerns like dullness, dehydration, rough texture, and wrinkles. Discontinuing it will simply allow the skin to return to its original state and aging process without any addictive effects.

10.Ask & Answer

Ask	Cause	Answer
No suction from the microdermabrasion handle.	The rubber ring is absent.	Put in a rubber ring.
	The rubber ring on the tip is too tightly twisted, leading to air leakage.	Please adjust it slightly to loosen it.
No mist is coming out of the spray handle.	The nozzle may be blocked.	Clean the spray head with a needle.
	The rubber hose connecting the spray handle is loose.	Secure the rubber hose.

11.Operation guide

Face: （Step1:  2mins＞Step2:  2mins）

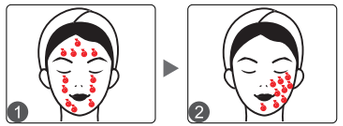

（ ＞ Step 3:  10mins ）

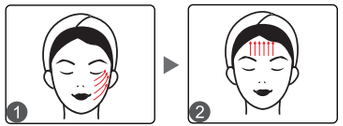

12.Warranty & Support

We provide a one-year warranty and a three-month return and replacement policy from the date of purchase.

Product Name: Cleansing & Hydrating Machine

Product Model: MS-4274PRO

Production Date: _____

Quality Inspection: _____

PASS